FI-ANG3
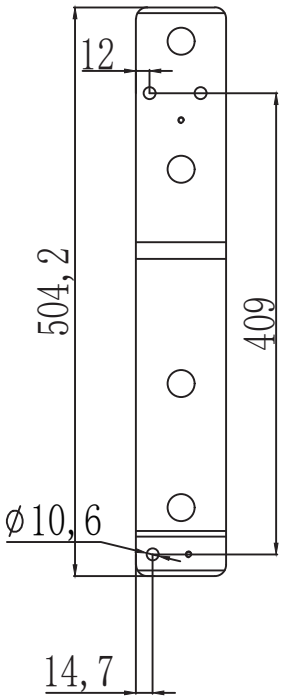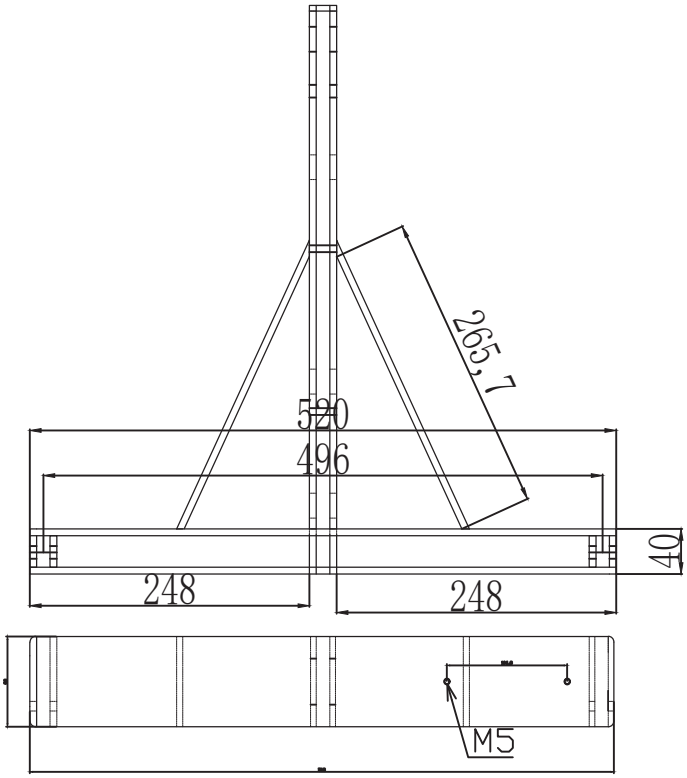
Rigging Mount For FA-3X10TP, FA-2X8TP, FA-10TP